Phantom
Hands

Tangāli Modular Chair - Both Arms

Technical Specification Sheet

+91 77603 29900
info@phantomhands.in
phantomhands.in

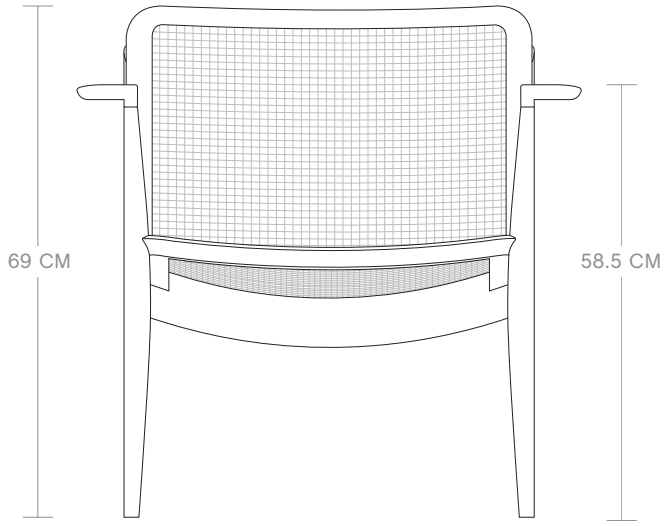

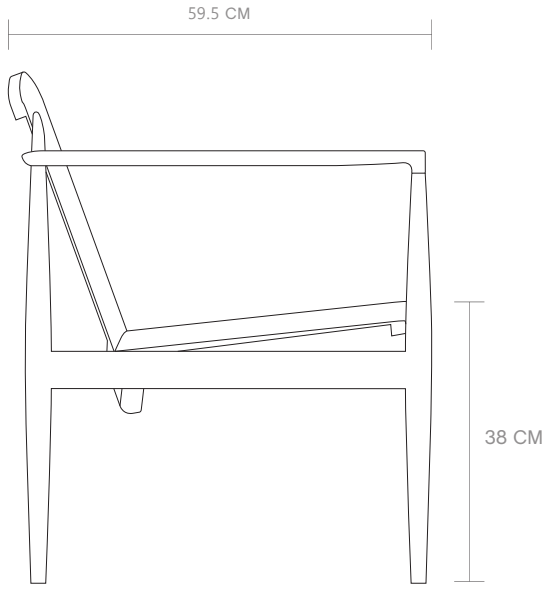

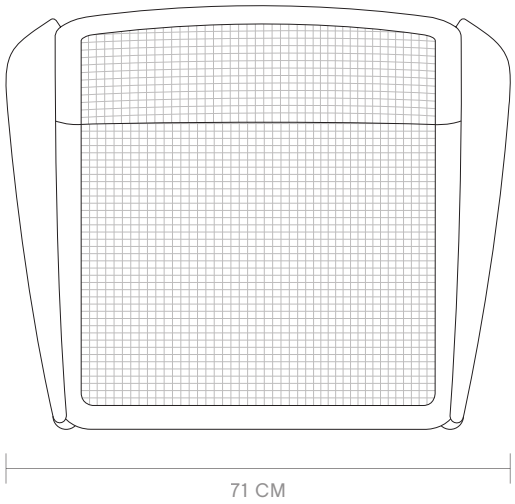

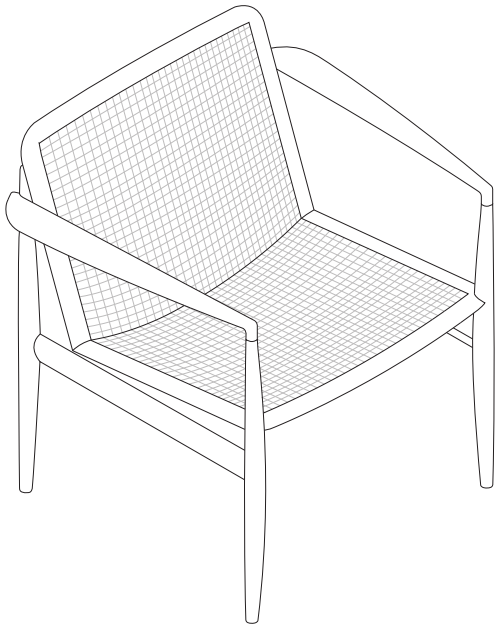

Phantom Hands

Tangāli Modular Chair - One Arm

Technical Specification Sheet

+91 77603 29900
info@phantomhands.in
phantomhands.in

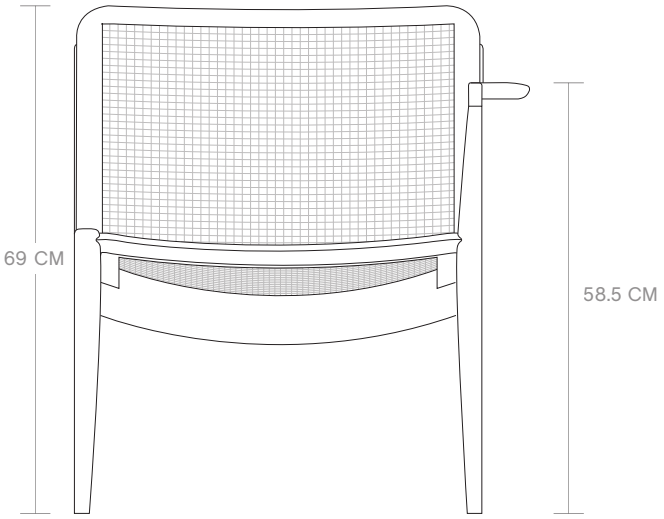

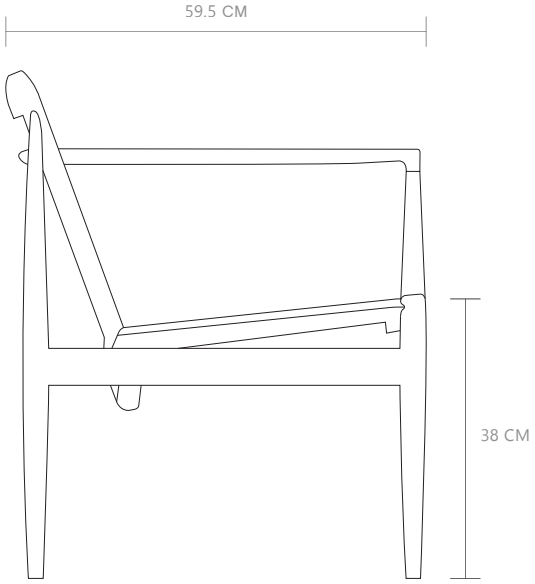

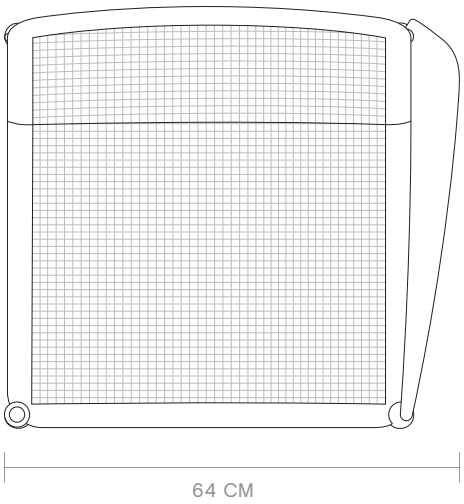

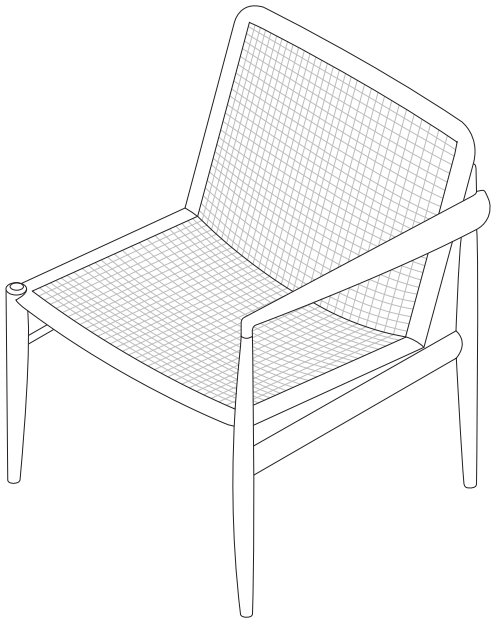

Phantom Hands

Tangāli Modular Chair - Armless

Technical Specification Sheet
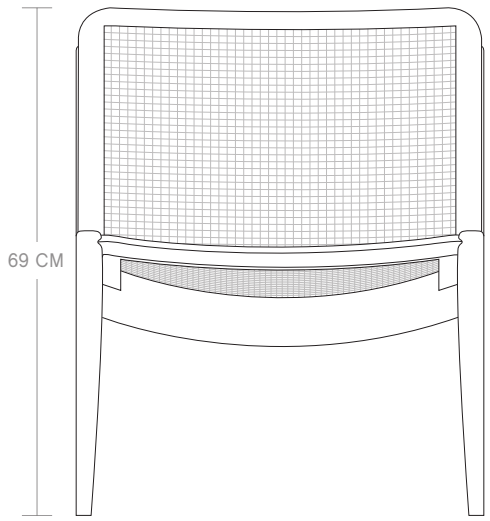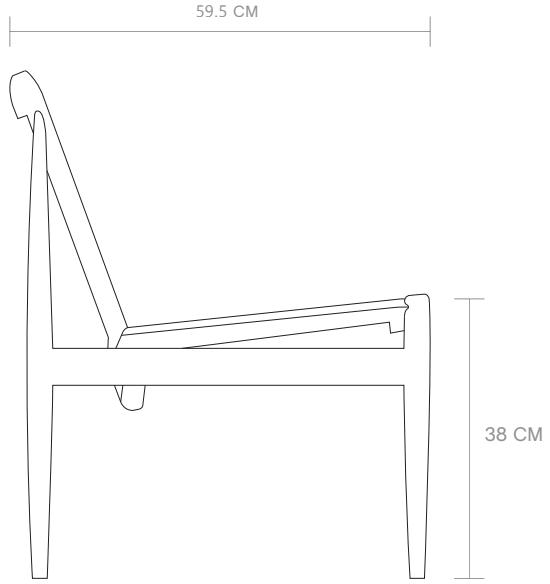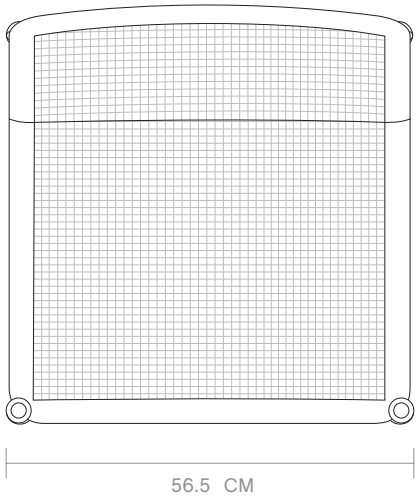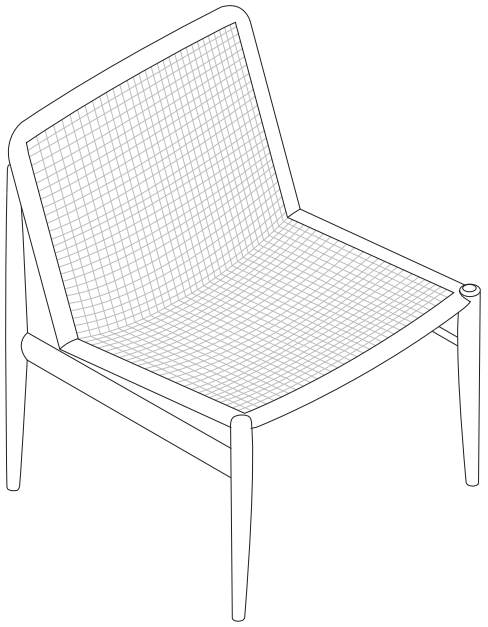
+91 77603 29900
info@phantomhands.in
phantomhands.in